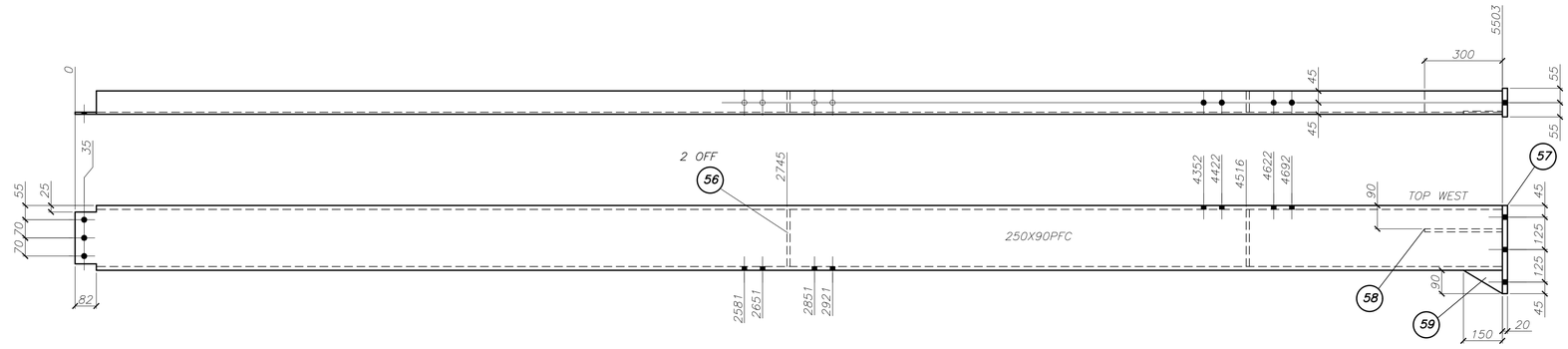

1 REQD. AS DRAWN MK. 3FB1.
1 REQD. OPP. HAND MK. 3FB4.

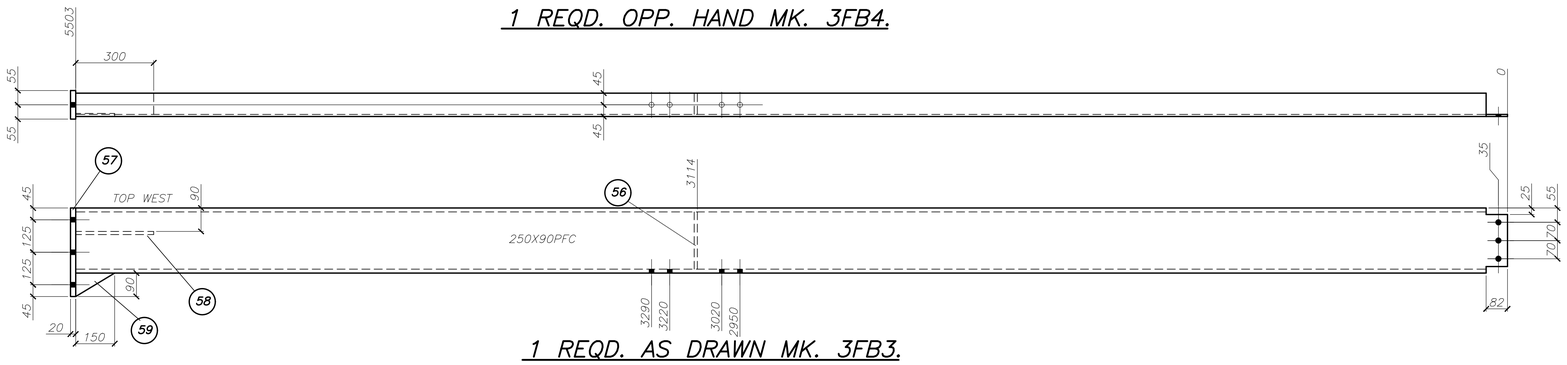

1 REQD. AS DRAWN MK. 3FB3.
1 REQD. OPP. HAND MK. 3FB2.

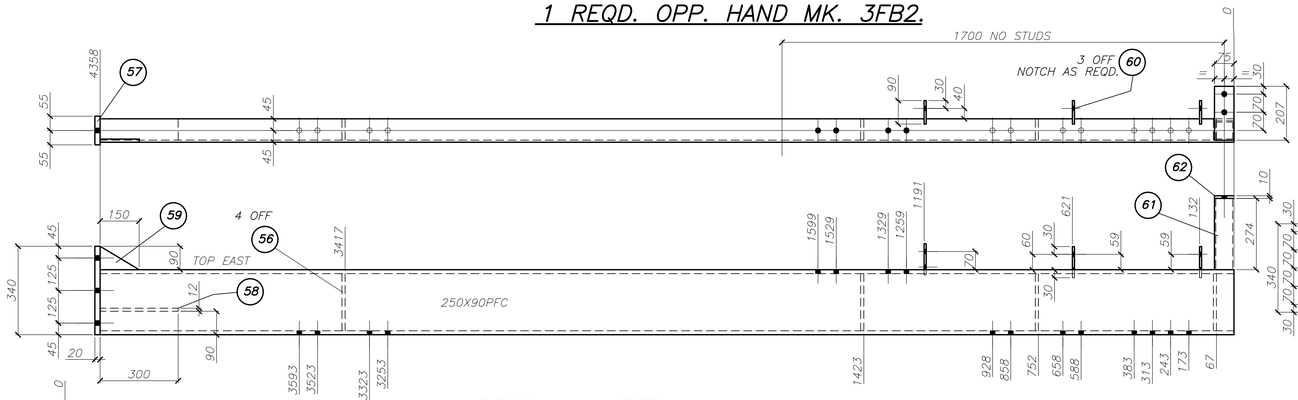

1 REQD. MK. 3FB1A.

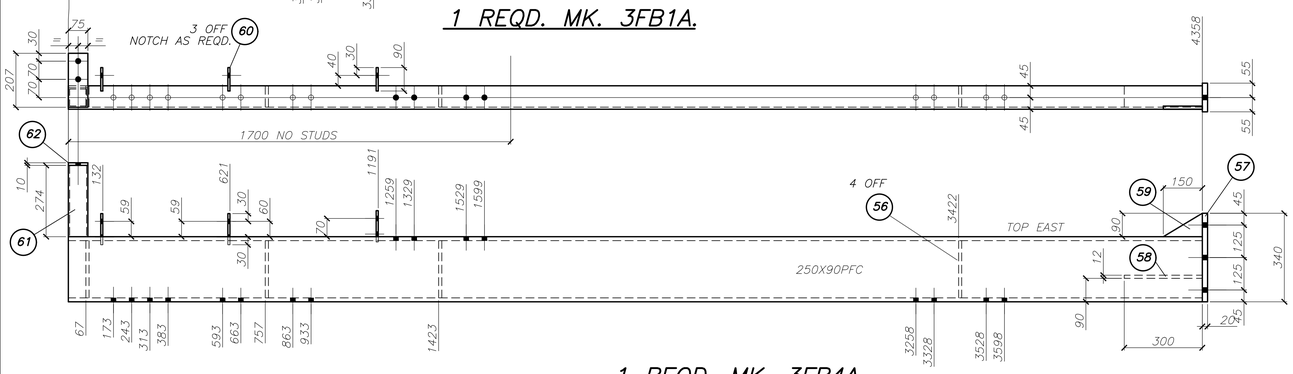

1 REQD. MK. 3FB4A.

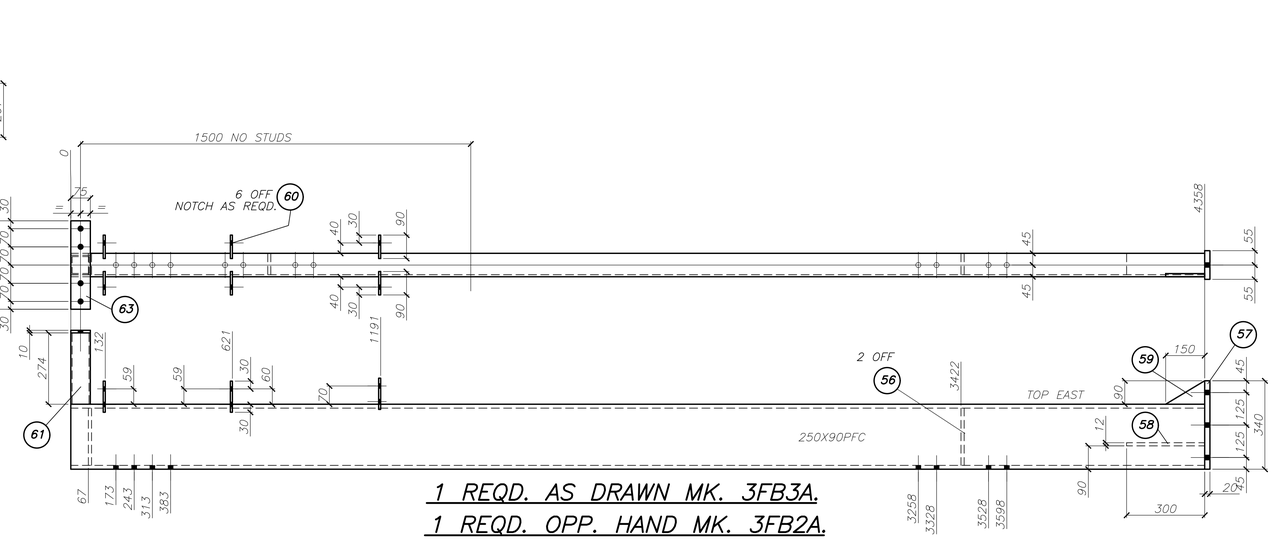

1 REQD. AS DRAWN MK. 3FB3A.
1 REQD. OPP. HAND MK. 3FB2A.

NOTE TOP OF ALL BEAMS WELD N20 STUDS 110 LONG AT MAX. 1000 CTS

DATE	AMD	DRN	CHK	APR	DESCRIPTION

ITEM	NO OFF	SECTION	LENGTH	REMARKS

ITEM	NO OFF	SECTION	LENGTH	REMARKS

ITEM	NO OFF	SECTION	LENGTH	REMARKS
FB1A-4A	4		4358	

ITEM	NO OFF	SECTION	LENGTH	REMARKS
FB1-4	4	250X90PFC	5503	ø22 HLS.
63	2	75X10PL	340	ø22 HLS.
62	2	75X10PL	207	ø22 HLS.
61	4	75X75X5SHS	274	
60	18	90X8PL	120	ø14 HLS.
59	8	90X12PL	150	SHAPE
58	8	90X12PL	300	
57	8	110X20PL	340	ø22 HLS.
56	18	90X10PL	220	

NOTES
1. READ IN CONJUNCTION WITH ARCH. & ENG. DRAWINGS

STRINCO DRAFTING SERVICES
MOBILE 0407902318
EMAIL. strincodrafting@bigpond.com.au

CLIENT: HARVIHIL STEEL FABRICATORS
PAINT: AS SPEC
WELD: 6 CFW
SCALE: 1:10
DRN: D.STRINGER
DATE: SEP.19
CHKD
APPR
CAD FILE: HH.08-19

JOB: 168 PROSPECT ROAD PROSPECT
TITLE: STEEL DETAILS
DRG. NO: 19
REV.